Manhattan 50

ecosmart+™ Fire

The Manhattan 50 Fire Table combines smart design with practical functionality. Perfect for compact spaces, this EcoSmart fire table brings inviting warmth and contemporary elegance while making the most of every square inch.

Manhattan 50

ecosmart+ Fire

Design Features

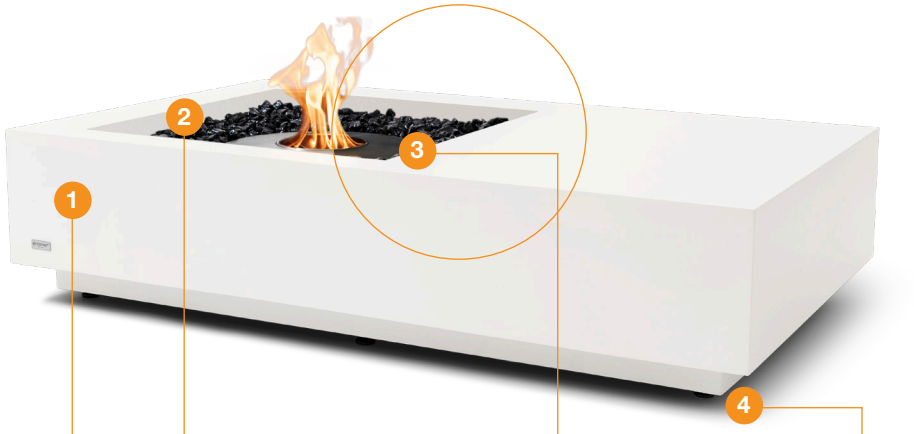

1. Fluid™ Concrete Finish

Incredibly strong yet relatively lightweight, EcoSmart's concrete products incorporate revolutionary Fluid Concrete Technology. Fluid features a stain and impact-resistant barrier that protects the concrete from environmental weathering – even under extreme conditions and long UV exposure.

Premium Teak Wood Finish

The most premium wood on the planet, teak is the strongest, most durable hardwood available. It contains a natural oil which repels water, keeping it from warping, cracking, or becoming brittle. Teak is the perfect material for outdoor furniture.

2. Decorative Media

Models come with black glass charcoal to add the finishing touch. They do not emit any toxic fumes, smoke, or ash.

Surround Colours/Finish

Available in three Fluid™ concrete colours: Natural, Graphite and Bone. Or Natural Teak hardwood.

Quick & Easy Installation

With no installation or building works required, simply unpack, put into position, and off you go.

3. Burner Colours

Available with a Stainless Steel or Black Burner.

Environmentally-Friendly

Bioethanol fireplaces use an environmentally-friendly, renewable energy source that burns clean and delivers warming heat. You and your guests will enjoy the ambiance and tranquillity of a real fire, without the hassles of burning real wood - no more embers, ash, and soot to clean up.

4. Articulating Feet

Our Fire Pits and Tables feature 360° height-adjustable articulating feet, so you can achieve a perfectly level and stable model before operating the fireplace.

Ground Fixing Brackets

Models come with fixing brackets for permanently locating into a fixed position.

Global Compliance

Bioethanol burners are O-TL listed to UL 1370 and ACCC Safety Mandate compliant, and were tested by BSI to EN 16647:2015. To comply with EN 16647, the Indoor Safety Tray and, on AB8 models, the included Efficiency Ring must be installed before operating indoors.

Model shown ESF.FT.MHA.50 Model not available in all countries.

Disclaimer. All product specifications and data are subject to change without notice and believed to be correct at the time of publication. MAD Design Group (MDG), its affiliates, agents, and employees, and all persons acting on its or their behalf (collectively, "MAD Design Group"), disclaim any and all liability for any errors, inaccuracies or incompleteness contained herein or in any other disclosure relating to any product. MDG disclaims any and all liability arising out of the use or application of any product described herein or of any information provided herein to the maximum extent permitted by law. The product specifications do not expand or otherwise modify MDG's terms and conditions of purchase, including but not limited to the warranty expressed therein, which apply to these products. No license, express or implied, by estoppel or otherwise, to any intellectual property rights is granted by this document or by any conduct of MDG. Customers using or selling MDG products not expressly indicated for use in such applications do so entirely at their own risk and agree to fully indemnify MDG for any damages arising or resulting from such use or sale. Please contact authorised personnel from MDG to obtain written terms and conditions regarding products designed for such applications. Images are indicative only.

© Copyright 2004 - 2026 MAD Design Group. All rights reserved. V2610

Manhattan 50

ecosmart+ Fire

Accessories

Included

Decorative Glass Media

Our decorative Black Glass Charcoal is made from high-quality tempered glass.

Jerry Can with Safety Spout and e-NRG* bottle adaptor

Jerry Can allows safe storing/decanting of e-NRG ethanol. The e-NRG adaptor connects the Safety Spout to an e-NRG fuel bottle.

Lighting Rod & Lighter

The Lighting Rod is designed to safely adjust the slider position on the burner. It is also used for the ignition procedure.

AB8 Efficiency Ring

Placed over the internal burner vent, it serves to increase the efficiency of the burner as well as further stabilise the flame.

Optional

Glass Fire Screen (S22)

Screens help to minimise the impact of wind on the flame and reduce fuel consumption.

All-Season Cover (LT50)

Protect your investment with our water-resistant custom outdoor cover, featuring PVC cones to prevent water pooling and fit models with a Glass Fire Screen.

AB8 Silicone Burner Cover

Placed over the burner, the black silicone burner cover protects the burner from the elements when not in use.

Glass Cover Plate (S22)

Enables fire pit tables to easily be transformed into a usable coffee table surface.

*e-NRG not available in all countries.

Disclaimer. All product specifications and data are subject to change without notice and believed to be correct at the time of publication. MAD Design Group (MDG), its affiliates, agents, and employees, and all persons acting on its or their behalf (collectively, "MAD Design Group"), disclaim any and all liability for any errors, inaccuracies or incompleteness contained herein or in any other disclosure relating to any product. MDG disclaims any and all liability arising out of the use or application of any product described herein or of any information provided herein to the maximum extent permitted by law. The product specifications do not expand or otherwise modify MDG's terms and conditions of purchase, including but not limited to the warranty expressed therein, which apply to these products. No license, express or implied, by estoppel or otherwise, to any intellectual property rights is granted by this document or by any conduct of MDG. Customers using or selling MDG products not expressly indicated for use in such applications do so entirely at their own risk and agree to fully indemnify MDG for any damages arising or resulting from such use or sale. Please contact authorised personnel from MDG to obtain written terms and conditions regarding products designed for such applications. Images are indicative only.

© Copyright 2004 - 2026 MAD Design Group. All rights reserved. V2610

Manhattan 50

ecosmart+ Fire

Specifications

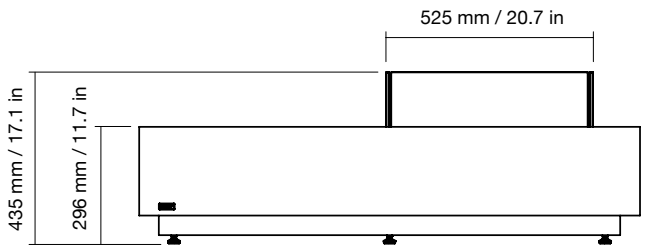

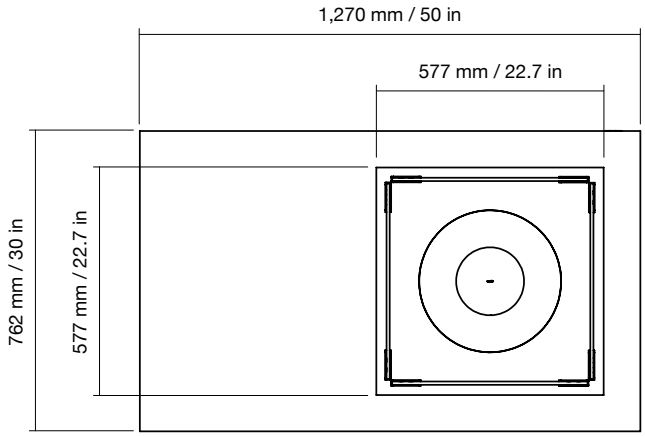

ESF.FT.MHA.50

Product Dimensions

L 1,270 mm [50 in]
W 762 mm [30 in]
H 296 mm [11.7 in]

Weight (approx)

Concrete 51.9 kg [114.3 lb]
Teak 44.9 kg [98.9 lb]
Weight includes burner and media.

Product Materials

Fluid™ Concrete or Teak Wood Surround; Grade 304 Stainless Steel (Optional Black Ceramic Coating) Burner.

Surround Colours

Painted Fluid Concrete:
Natural, Graphite or Bone

Teak:
Natural Finish

Burner Colours

Available in:
Stainless Steel or Black

Burner Ventilation and Efficiency*

Fuel Type	Compatible Burner	Fuel Capacity	Heats on Average (Indoors)	Thermal Output Net (MAX per burner)	Approx. Burn Time	Minimum Room Size	Application[1]
e-NRG Bioethanol **e-NRG.com**	AB8	8 L [2.1 Gal]	Over 60 m² [645 ft²]	21.56 MJ/h, 20,433 BTU/h, 5.99 kW	7 - 9 hours	116 m³ [4,096 ft³]	Indoor & Outdoor
	With Efficiency Ring**		Over 30 m² [322.9 ft²]	13.9 MJ/h, 12,860 BTU/h, 3.77 kW	9 - 11 hours		

*These values are indicative only and may vary depending on the model purchased, installation, and the seasonal resource used to manufacture e-NRG. [1]For indoor use, additional parts are required. Your chosen application is the ONLY application the model can be used in due to modified configuration of the model. Please advise your Sales Representative at time of purchase so that the product can be configured accordingly. Bioethanol burners are O-TL listed to UL 1370 and ACCC Safety Mandate compliant, and were tested by BSI to EN 16647:2015. **To comply with EN 16647, the Indoor Safety Tray and, on AB8 models, the included Efficiency Ring must be installed before operating indoors. Line drawings show concrete models with the optional Recessed Glass Fire Screen and AB8 Burner.

For more information please reference the Clearance & Installation Manual

Disclaimer. All product specifications and data are subject to change without notice and believed to be correct at the time of publication. MAD Design Group (MDG), its affiliates, agents, and employees, and all persons acting on its or their behalf (collectively, "MAD Design Group"), disclaim any and all liability for any errors, inaccuracies or incompleteness contained herein or in any other disclosure relating to any product. MDG disclaims any and all liability arising out of the use or application of any product described herein or of any information provided herein to the maximum extent permitted by law. The product specifications do not expand or otherwise modify MDG's terms and conditions of purchase, including but not limited to the warranty expressed therein, which apply to these products. No license, express or implied, by estoppel or otherwise, to any intellectual property rights is granted by this document or by any conduct of MDG. Customers using or selling MDG products not expressly indicated for use in such applications do so entirely at their own risk and agree to fully indemnify MDG for any damages arising or resulting from such use or sale. Please contact authorised personnel from MDG to obtain written terms and conditions regarding products designed for such applications. Images are indicative only.

© Copyright 2004 - 2026 MAD Design Group. All rights reserved. V2610